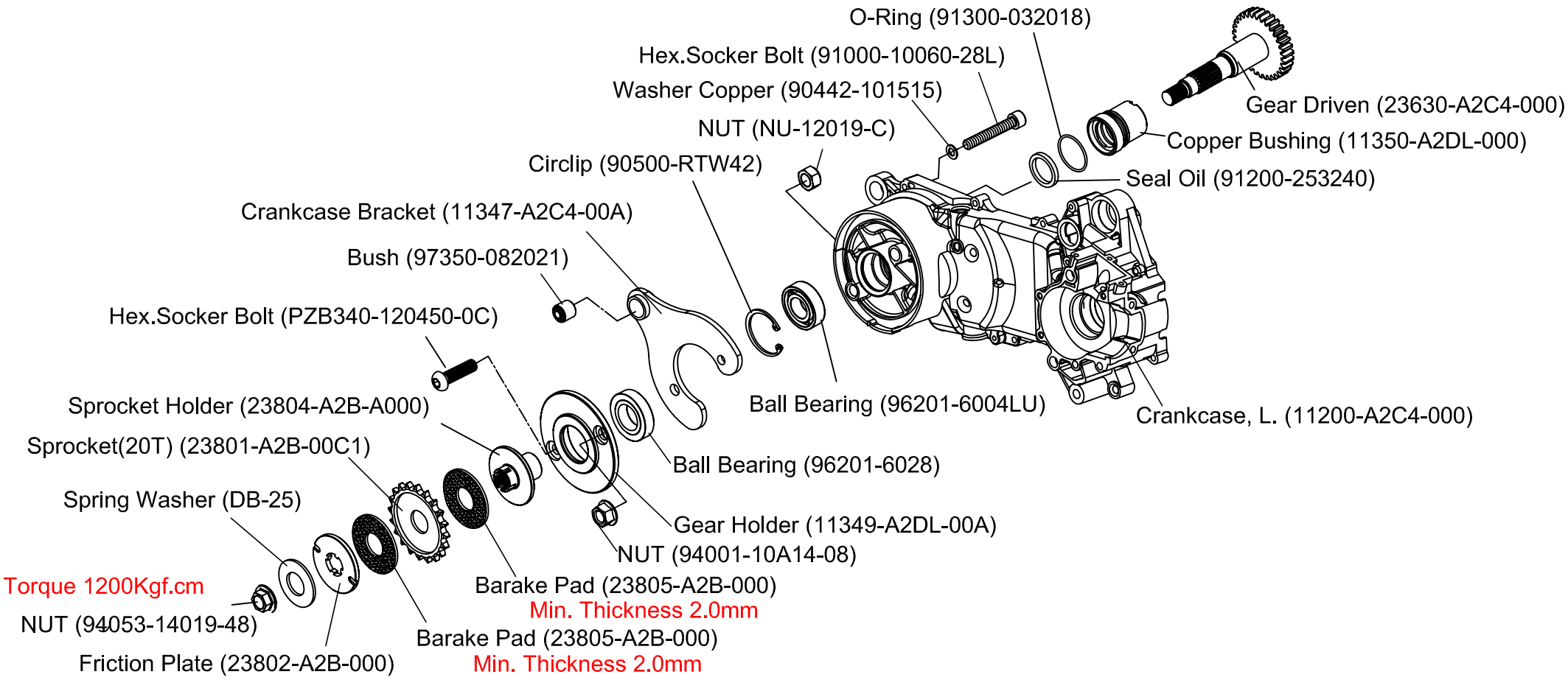
O-Ring (91300-032018)
Hex.Socker Bolt (91000-10060-28L)
Washer Copper (90442-101515)
NUT (NU-12019-C)
Circlip (90500-RTW42)
Crankcase Bracket (11347-A2C4-00A)
Bush (97350-082021)
Hex.Socker Bolt (PZB340-120450-0C)
Sprocket Holder (23804-A2B-A000)
Sprocket(20T) (23801-A2B-00C1)
Spring Washer (DB-25)
Torque 1200Kgf.cm
NUT (94053-14019-48)
Friction Plate (23802-A2B-000)
Barake Pad (23805-A2B-000)
Min. Thickness 2.0mm
Barake Pad (23805-A2B-000)
Min. Thickness 2.0mm
NUT (94001-10A14-08)
Gear Holder (11349-A2DL-00A)
Ball Bearing (96201-6028)
Ball Bearing (96201-6004LU)
Seal Oil (91200-253240)
Copper Bushing (11350-A2DL-000)
Gear Driven (23630-A2C4-000)
Crankcase, L. (11200-A2C4-000)